CUSTOMER NO:	REMARK
K5433.3	E.F.B

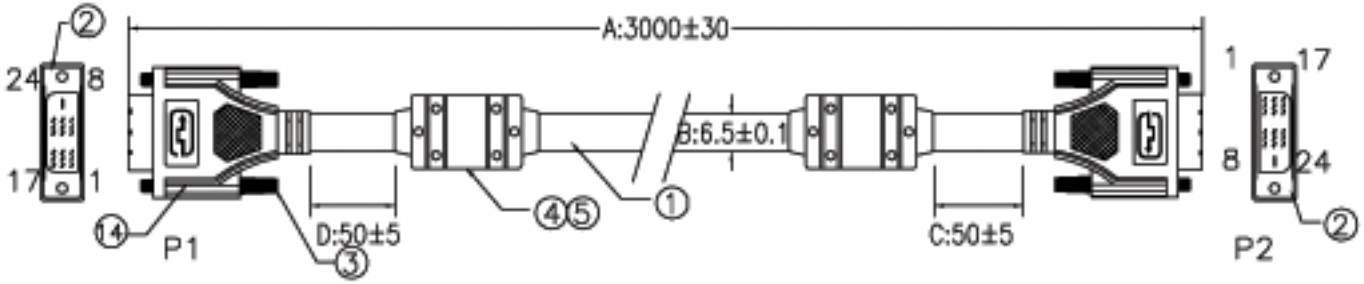

PINOUT:

P1 DVI-18P+1		P2 DVI-18P+1
1		1
2		2
3	GND-BLK	3
7		7
6		6
9		9
10		10
11	GND-BLK	11
14		14
15		15
16		16
17		17
18		18
19	GND-BLK	19
22	GND-BLK	22
23		23
24		24
SHELL	BRAID	SHELL

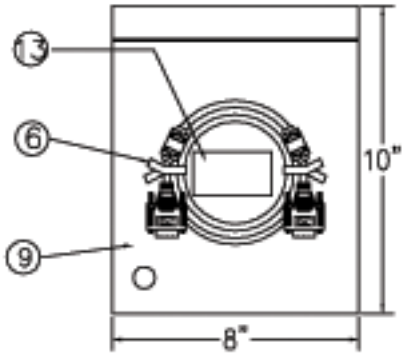

NOTE:

1) PRIMARY DIM: A. C. D
2) RoHS COMPLIANT.

3	SCREW #4-40UNC E:30.5MM BLACK(1101) FOR APPLE (RoHS)
2	DVI-18P+1 BLACK SOLDER TYPE BRASS TERMINAL GOLD FLASH W/METAL HOOD OD:8.5 (RoHS)
1	CABLE UL20276 (30AWG*1P+Aluminum foil+Drain)*4+30AWG*5C+Aluminum foil+Braid(85%)+Drain OD:6.5MM BLACK(1101) 3000MM (RoHS)

DRAWING APPROVED _____ DATE: _____

SAMPLE APPROVED PER DRAWING SPECIFICATIONS _____ DATE: _____

PROPRIETARY & CONFIDENTIAL, THIS DOCUMENT MAY NOT BE COPIED, OR DISCLOSED IN WHOLE OR IN PART WITHOUT THE WRITTEN CONSENT OF EFB.

MM

SCALE N

SHEET 1/1

TITLE DVI CABLE

CUS. NAME

DIMENSIONAL TOLERANCES UNLESS OTHERWISE NOTED

CUS. P/N 2162-0650

DWG NO.

REV. A

DWN. DATE

CHECKED DATE

APPROVED DATE